Reference: En070724	Title: PV-295/3 + guard + Platea Plus	Date: 24/07/2007	
Description: 1220/AL on entrance. Guard CE990-Plus. Lock release on Platea Plus operates over R3		Customer: Steady group	Golmar Sistemas de comunicación s.a.

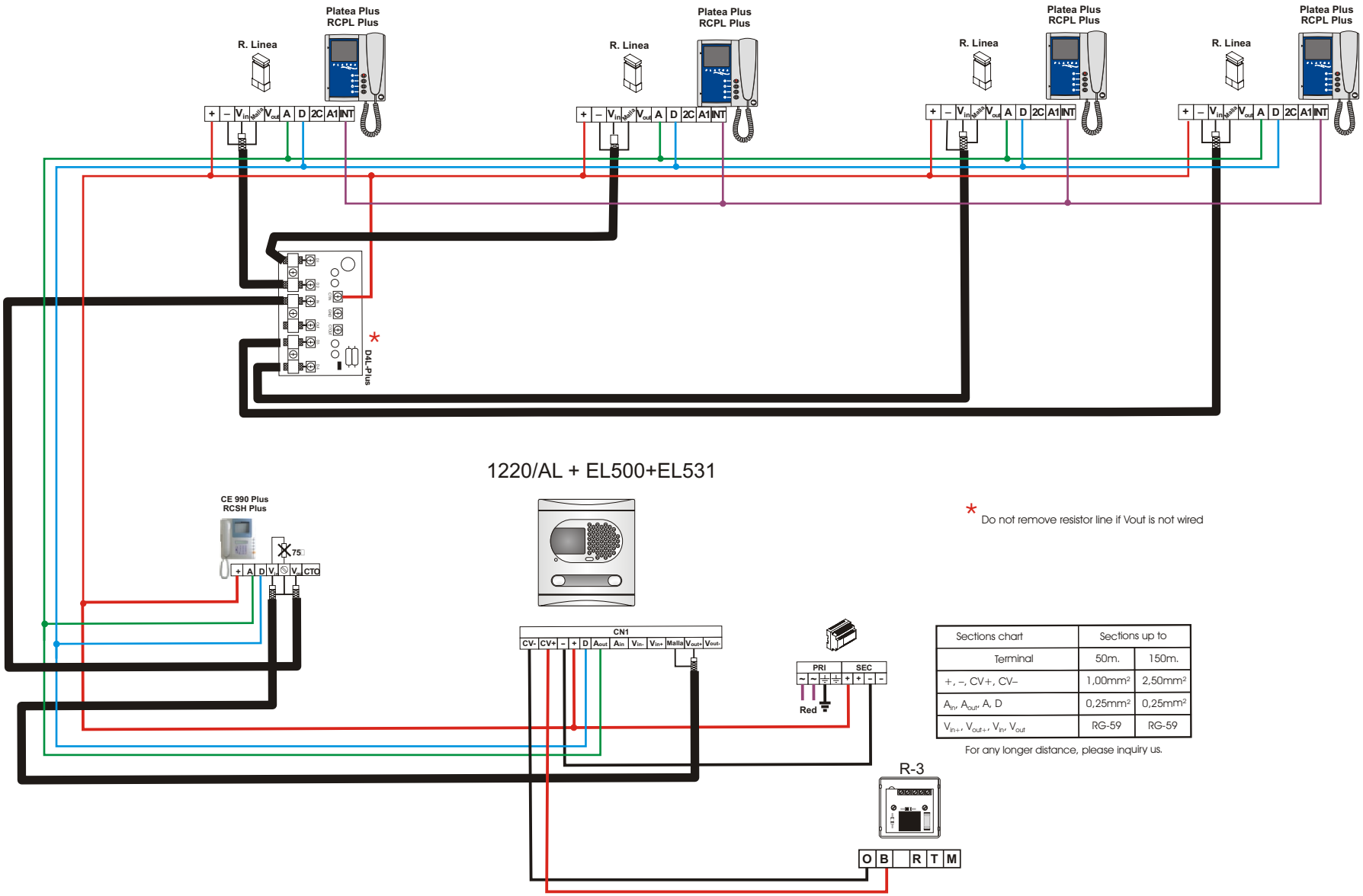

Sections chart	Sections up to	
Terminal	50m.	150m.
+, –, CV+, CV–	1,00mm²	2,50mm²
A_{in}, A_{out}, A, D	0,25mm²	0,25mm²
V_{in+}, V_{out+}, V_{in}, V_{out}	RG-59	RG-59

For any longer distance, please inquiry us.